Virtual Tall Towers and “Rings”

Alternative sources of CO_2 data for the Midcontinental Intensive (and the NACP in general)

Ken Davis
The Pennsylvania State University

Midcontinental Regional Intensive investigators’ workshop
Boulder, CO
February 21-22, 2006

outline

- Definitions: ‘ring’, VTT
  - what they are and are not
- Sites
- Mechanics of measurements
- Research plans

Virtual Tall Towers and “Rings”

- What is a virtual tall tower (VTT)?
  - A continental flux tower with well-calibrated, continuous CO_2 mixing ratio measurements in the surface layer
  - Estimates the mixing ratio in the mid-boundary layer during mid-day hours
- What is a “ring?”
  - Deployment of a tower-borne meso-net of well-calibrated CO_2 mixing ratio measurements to support a regional atmospheric inversion effort
  - Flux towers or communications towers are potential measurement sites
  - Oversampling effort – campaign-style methodological test

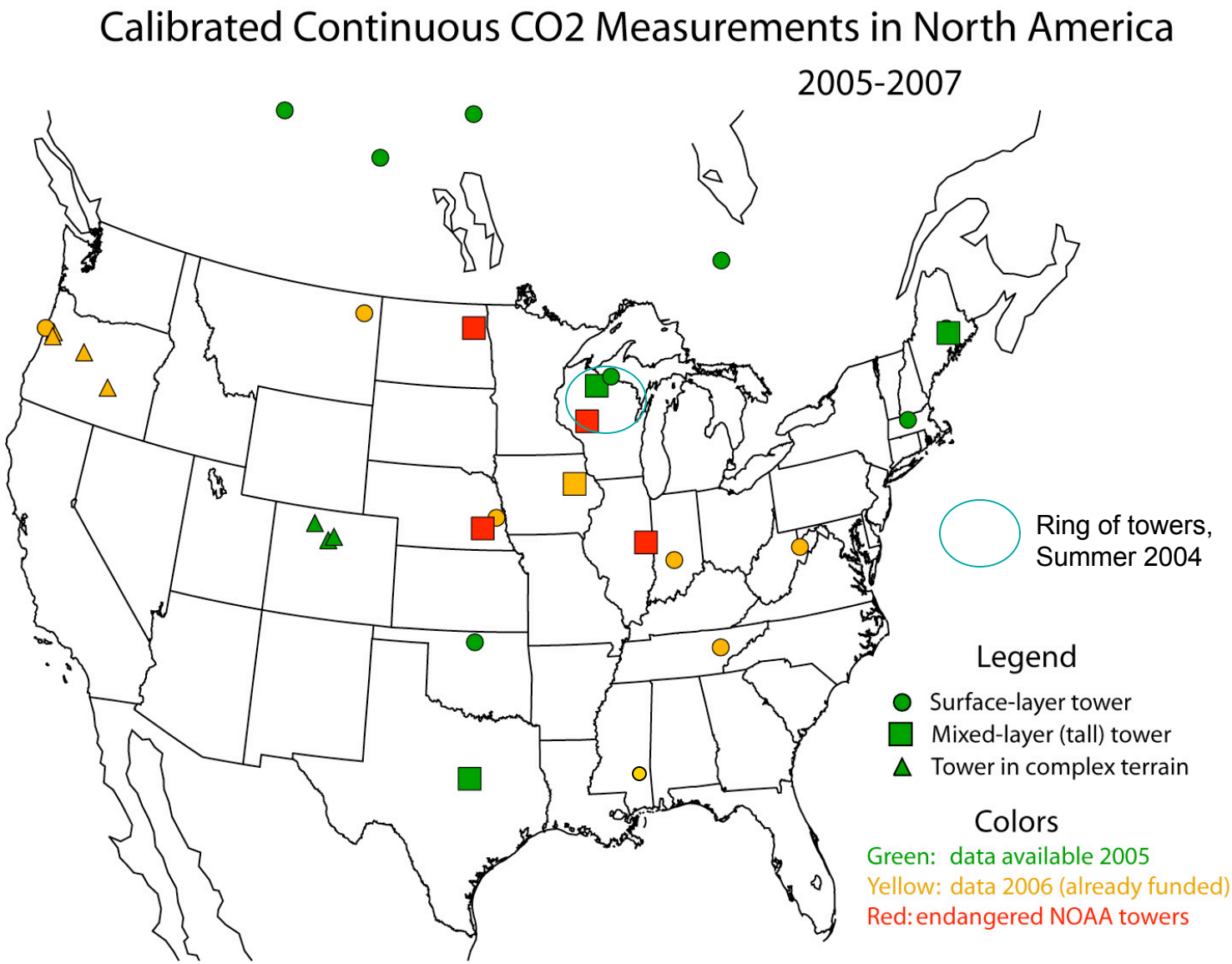

See http://www.amerifluxco2.psu.edu for calibrated CO_2 at AmeriFlux sites

What a VTT is not

- Unlike a tall tower:
  - Nocturnal boundary layer profile is missing

    (see Wang et al, in prep, budget estimates)
  - Midday observations only

    (night very hard to interpret, though some are trying)
  - Limited number of species observed

    (add flasks to VTTs?)
  - Surface layer measurement adds bias, variance

    (but not a great deal!)

Daily Mixing Ratio Profile from a Tall Tower

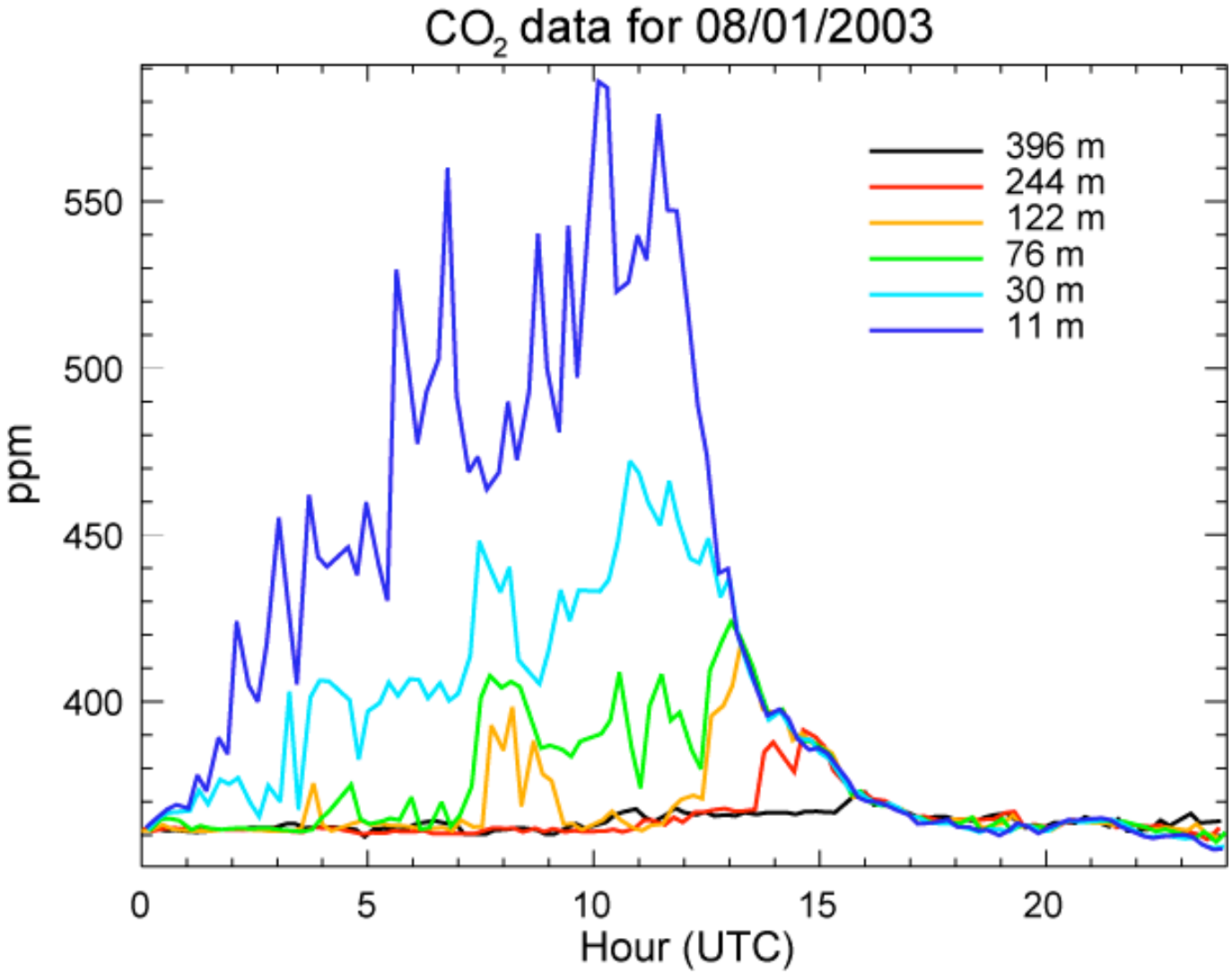

Is a Correction Required at Mid-Day?

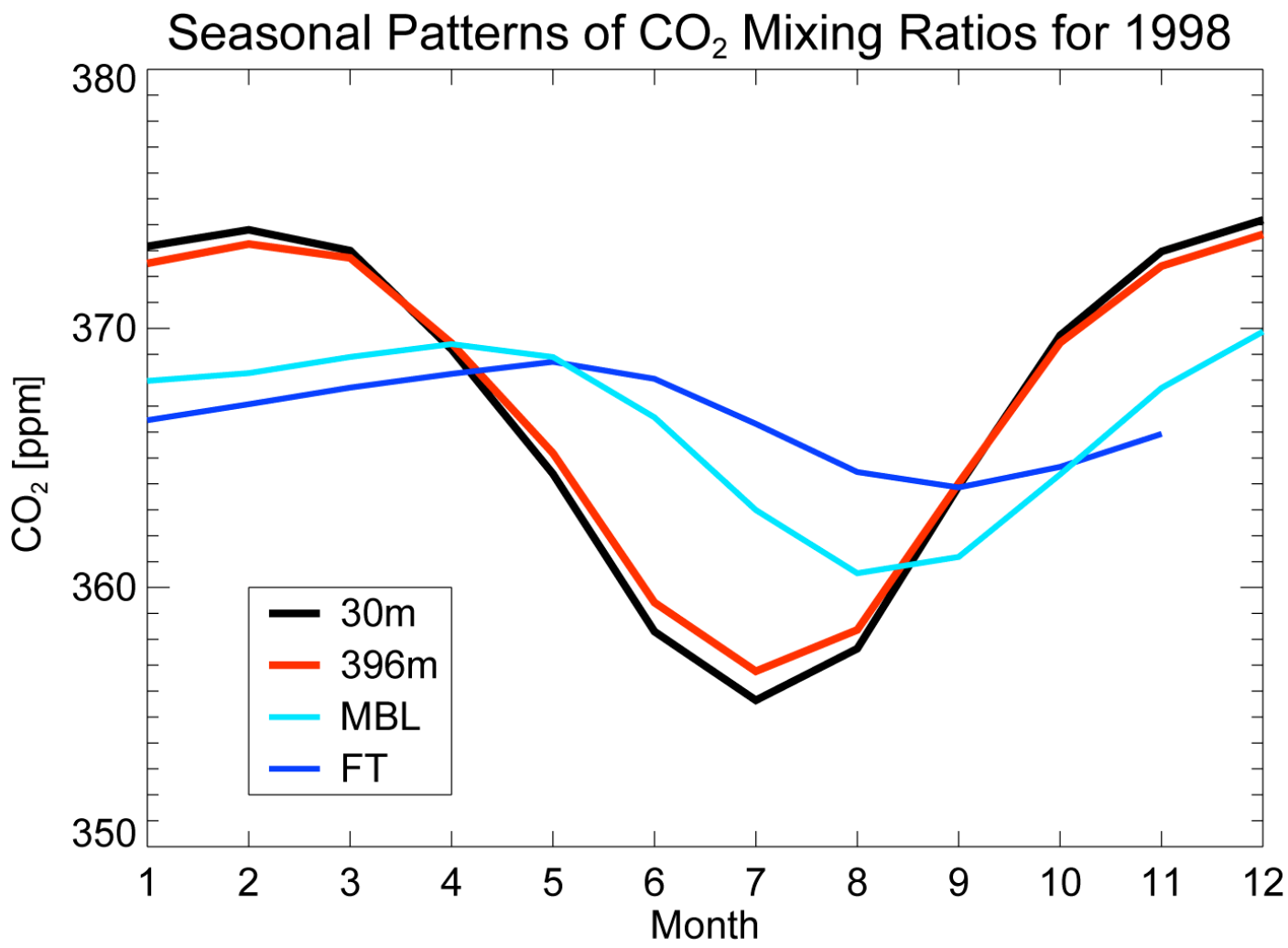

If You Prefer Numbers…

Monthly Summary for 1998

Month	CO2 (ppm) at 30m, midday	CO2 (ppm) at 396m, midday	ΔCO2 (ppm) 30m-396m, midday	_(396m-30m)	CO2 (ppm) at 396m, entire day	ΔCO2 (ppm) 396m(pm) 396m(entire)
1	373.15	372.53	0.62	1.60	372.46	0.07
2	375.34	374.57	0.78	1.72	373.96	0.60
3	372.91	372.69	0.22	0.85	372.73	-0.04
4	370.75	370.91	-0.16	0.22	371.23	-0.32
5	363.91	364.68	-0.77	0.94	366.21	-1.53
6	358.49	359.96	-1.47	1.58	362.54	-2.59
7	352.50	353.63	-1.13	0.98	354.59	-0.97
8	355.95	356.72	-0.77	0.93	356.85	-0.13
9	364.19	364.45	-0.26	0.64	364.76	-0.31
10	371.18	370.49	0.69	2.38	370.49	-0.0005
11	373.55	373.06	0.49	0.85	372.89	0.17
12	374.25	373.55	0.70	1.26	373.26	0.30
Annual Mean	**367.18**	**367.27**	**-0.09**		**367.67**	**-0.40**

Stephens, Richardson, Miles gas-hound-based CO_2 sensor (~$10K)

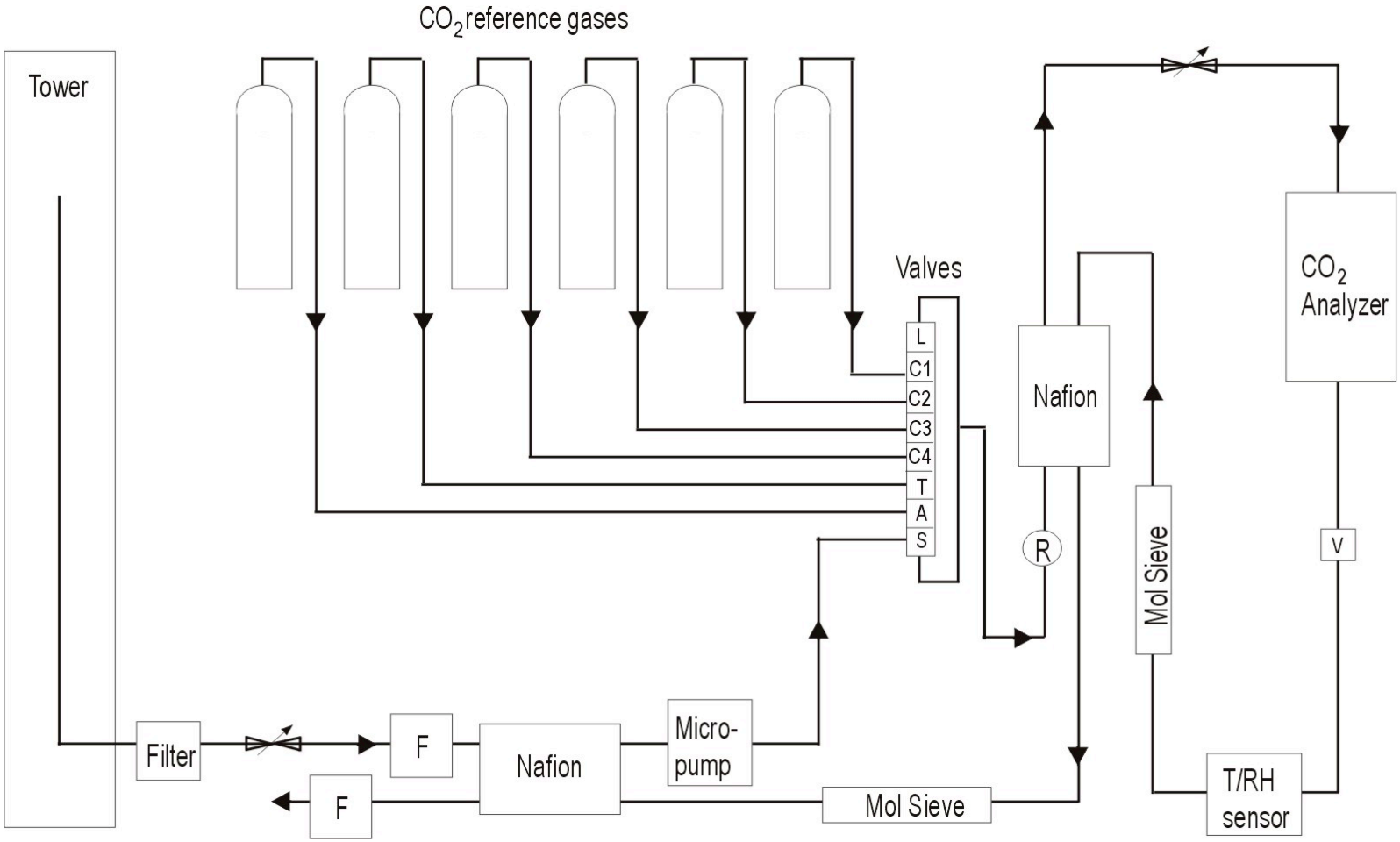

For more information, see www.amerifluxco2.psu.edu

Performance Testing

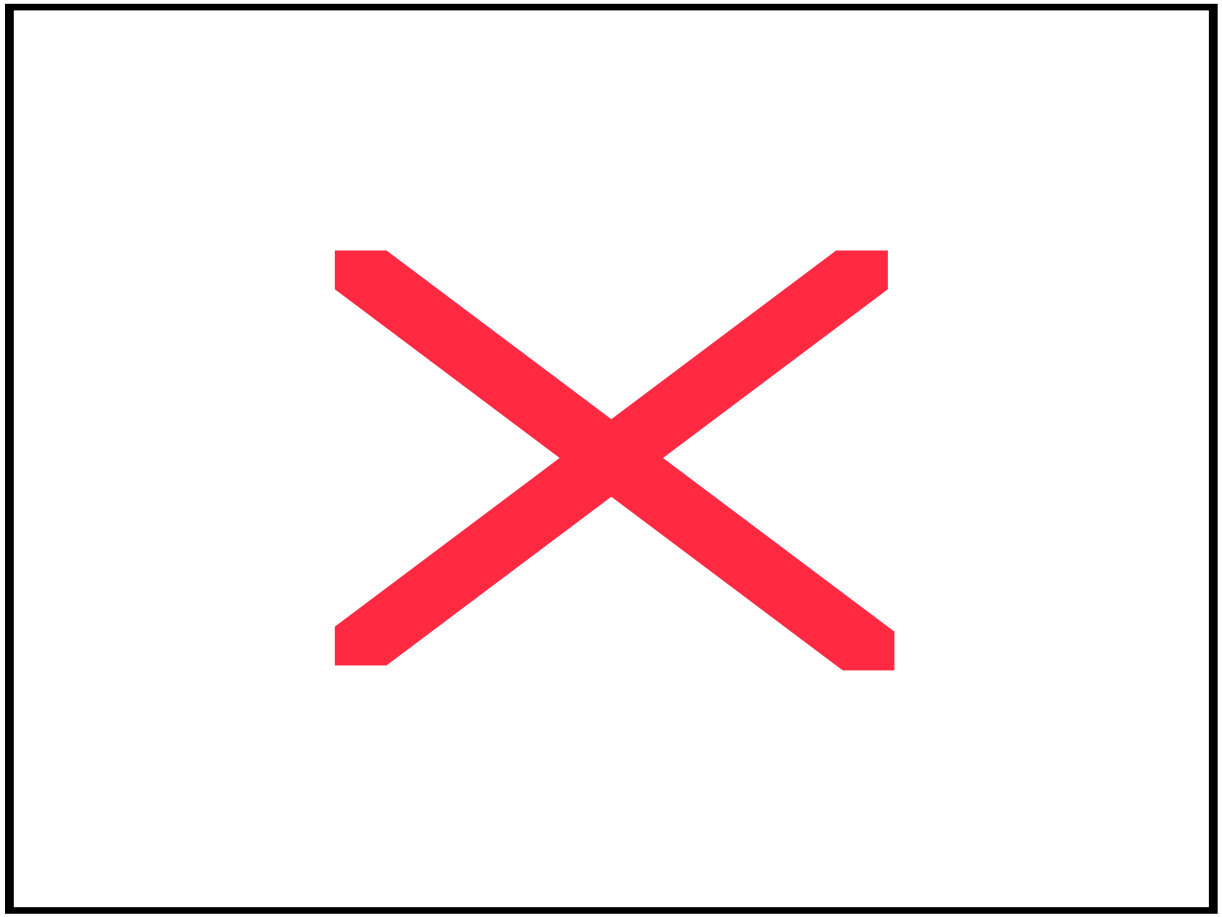

Difference of
daily averages

Difference between the PSU system and WLEF 76m CO_2 measurements in a test from April-August 2004. [Miles/Richardson/Uliasz, in prep.]

Penn State VTT/ring plans

- No further “ring” work funded at this time. Proposal(s) in prep.
- AmeriFlux CO_2 “VTT” project – funded through September 2006. Proposal(s) in prep.
  - Instrument ~5 flux tower sites (some flexibility in choice of sites still possible)
  - Perform “VTT data processing” for ~10 sites and submit data to Globalview CO_2
  - Attempt intercalibration among ~10 sites

VTT References

- Davis, K. J., 2003, Well-calibrated CO2 mixing ratio measurements at flux towers: The virtual tall towers approach, 12th WMO/IAEA Meeting of Experts, Toronto.
- Davis, K. J. et al., in prep, Methodology for a flux-tower based CO2 observing network: Virtual tall towers.
- Moeng, C.-H. and J. C. Wyngaard, 1984, Statistics of conservative scalars in the convective boundary layer, JAS, 41(21), 3161-3169.
- Moeng, C.-H., and J. C. Wyngaard, 1989, Evaluation of turbulent transport and dissipation closure in second-order modeling, JAS, 45, 2311-2330.
- Patton, E. G., et al., 2003, The influence of forest canopy on top-down and bottom-up diffusion in the planetary boundary layer, QJRMS, 129A, 1415-1434.
- Wang, W. et al., accepted, Observations of the top-down and bottom-up gradient functions in the convective boundary layer from a very tall tower, JTech.
- Wyngaard, J. C., 1987, A physical mechanism for the asymmetry in top-down and bottom-up diffusion, JAS, 44(7), 1083-1087.
- Wyngaard, J. C. and R. A. Brost, 1984, Top-down and bottom-up diffusion in the convective boundary layer, JAS, 41, 102-112.
- Yi, C. et al., 2001, Long-term observations of the dynamics of the continental boundary layer, JAS, 58(10), 1288-1299.